Dazzler Bed

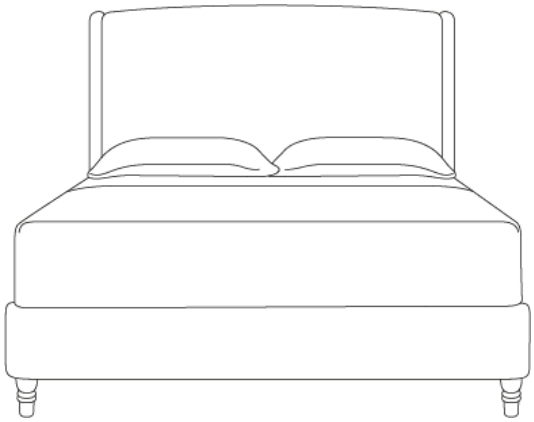

Available from

£885

Fabric	Single	Double	Kingsize	Superking
House Fabric	£885	£995	£1075	£1155
Clever Woolly Fabric	£1025	£1145	£1245	£1335
Clever Softie	£1065	£1195	£1295	£1395
Brushed Cotton	£1135	£1275	£1385	£1485
Bamboo Softie	£1135	£1275	£1385	£1485
Clever Velvet	£1205	£1355	£1465	£1575
Clever Vintage Linen	£1265	£1415	£1535	£1645
Clever Laundered Linen	£1425	£1595	£1725	£1855
Clever Wobbly Cotton	£1465	£1645	£1775	£1915

Turn over for full dimensions & more info!

Dazzler Bed

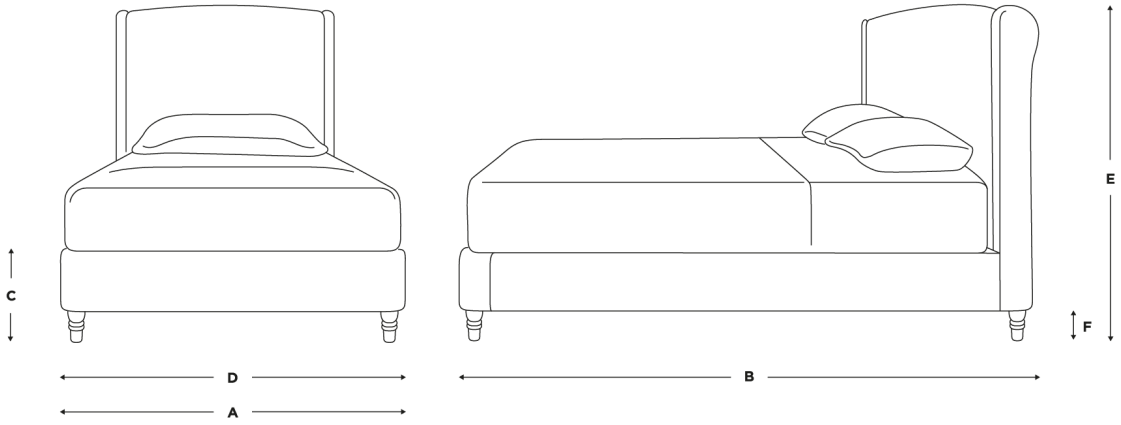

Dimensions	A	B	C	D	E	F
Single	92	204	25	92	120	10
Double	137	204	25	137	120	10
Kingsize	152	214	25	152	120	10
Superking	182	214	25	182	120	10

A - Bed width (cm)

B - Bed length (cm)

C - Bed height (cm)

D - Headboard width (cm)

E - Headboard height (cm)

F - Legs height (cm)

Need to know

Assembly	Our delivery crew will assemble for you and take away the packaging
How is it delivered?	Flat-packed for easy access
Bed frame	Handmade timber frame
Slat frame	Comes with slightly sprung birch slats
Handcrafted legs	100% solid oak
Guarantee	1-year guarantee on the bed frame

Any Questions?

Ask a Loafer or give one of our Chatterboxes a shout on 0203 141 8300

LOAF.COM